Vendo® Engineering *Uni-2 Set Up Guide*

Size: 15oz Glass **Rev. A** **Date 1/06/03**
Pkg. Description/Type: Nestle Choglit Drink
Franchise: Coca-Cola

Column Setup

Cam Setting	Back Spacer	Neck Guide Locations	Gage Bar Clip Location	Gage Bar Location	Side Spacer	Sold Out Flap	Sold Out Spacer
2	7	N/A	C/#1	#1	None	Short* 1083449	1077457

Note: To properly vend 15oz glass, the Uni-2 must have the columns set up correctly.

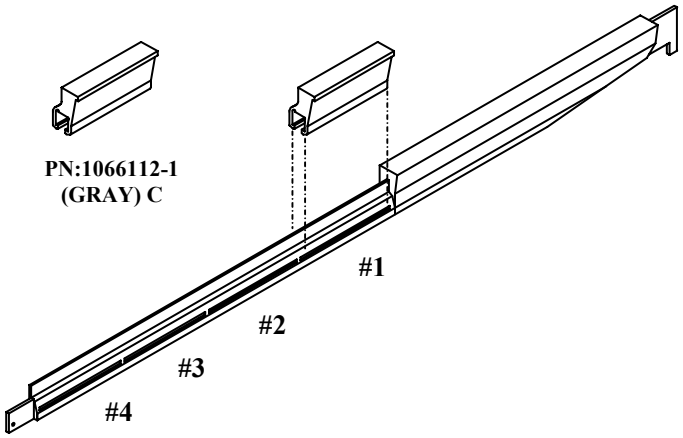

Gage Bar Clip Location

Set Up Guide

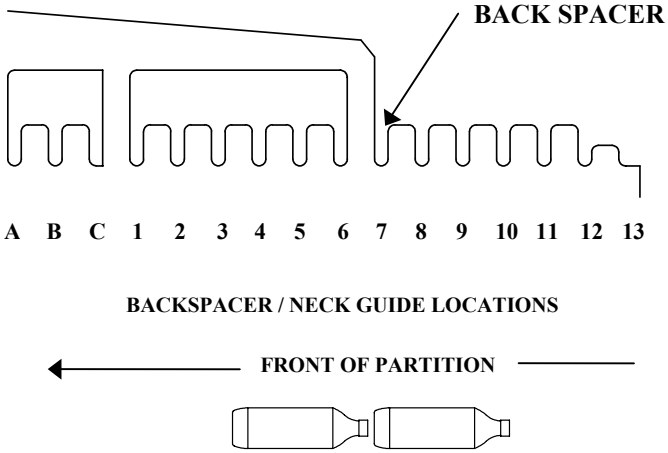

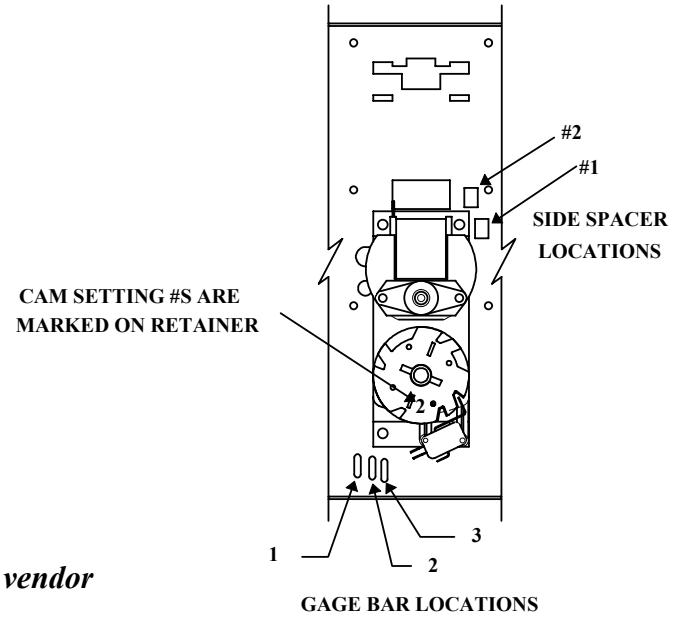

Note: Placement of bottle caps is to the back of the vendor

FOR OTHER PRODUCT SET-UP GUIDES, CONTACT THE VENDO COMPANY
TEL: (559) 439-1770 FAX: (559) 650-3455.