Vendo® Engineering 601 Uni-2 Set Up Guide

Size: 12oz / 355ml **Rev. A** **Date 6/14/00**
Pkg. Description/Type: DASANI
Franchise: COKE **KIT#1121859**

Column Setup

Cam Setting	Back Spacer	Neck Guide Locations	Gage Bar Clip Location	Gage Bar Location	Side Spacer	Magnetic Column Spacer (*)	Sold Out Flap	Sold Out Spacer
2	6	N/A	C/#1	#2	1060686 Loc. #2	TWO 1121822-2	Short 1083449	1077457

Note: To properly vend product the Uni-2 must have the columns set up as illustrated.
***Install magnetic column spacers into right side of partition above product side spacer (See Figure 1 for installation detail)**

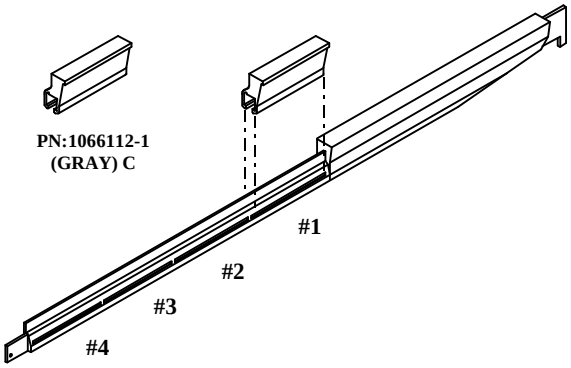

Gage Bar Clip Location

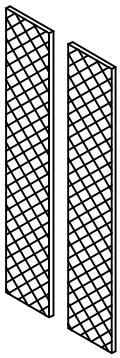

PN:1121822-2

Column Spacers

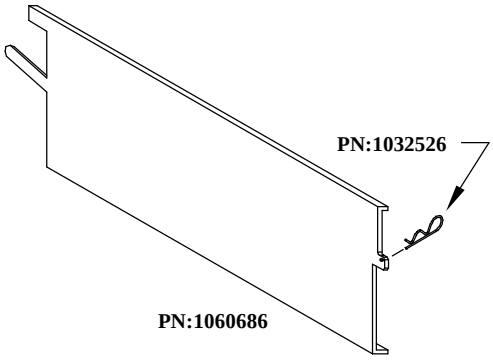

Spacer

Set Up Guide

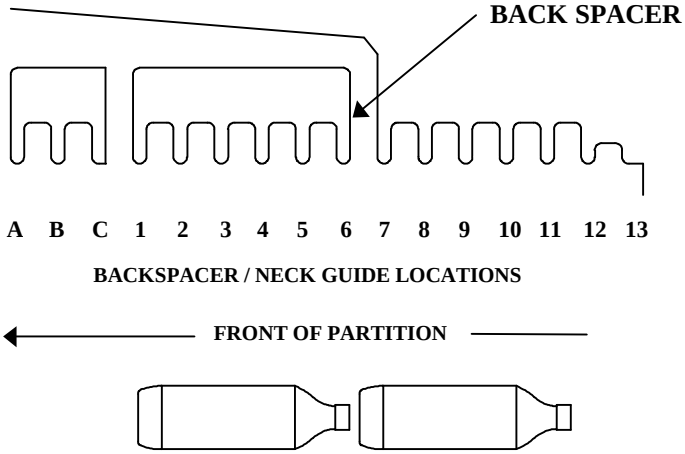

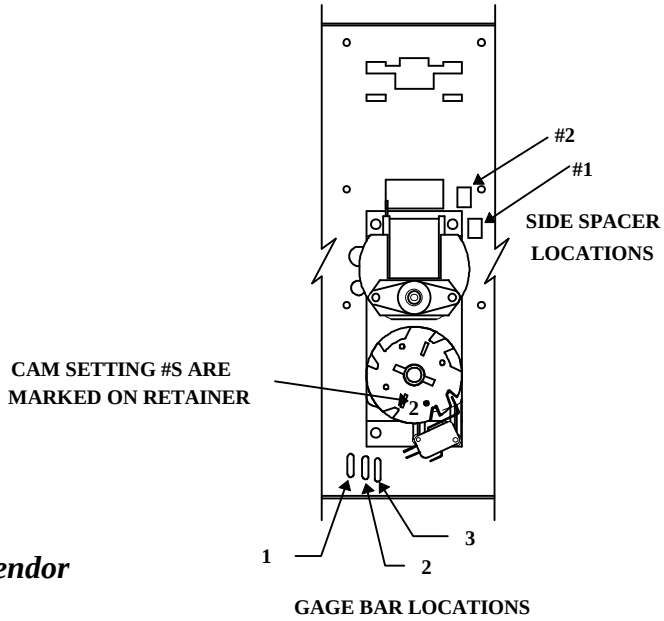

Note: Placement of bottle caps is to the back of the vendor

FOR OTHER PRODUCT SET-UP GUIDES, CONTACT THE VENDO COMPANY.
TEL: (559) 439-1770 FAX: (559) 439-2083.

Installation Instruction #1121869

<u>Caution:</u> Disconnect power cord from power source before beginning installation

<u>Installation (see Figure 1)</u>

Step #1 Locate Back Spacer into position #6.

Step #2 Install .37 product side spacer (P/N1060686).

Step #3 Install two of the 38” long magnetic foam pads (P/N1121822-3) on the right side partition.

Locate pads as shown in Figure 1 above the .37 product side spacer (P/N1060686)

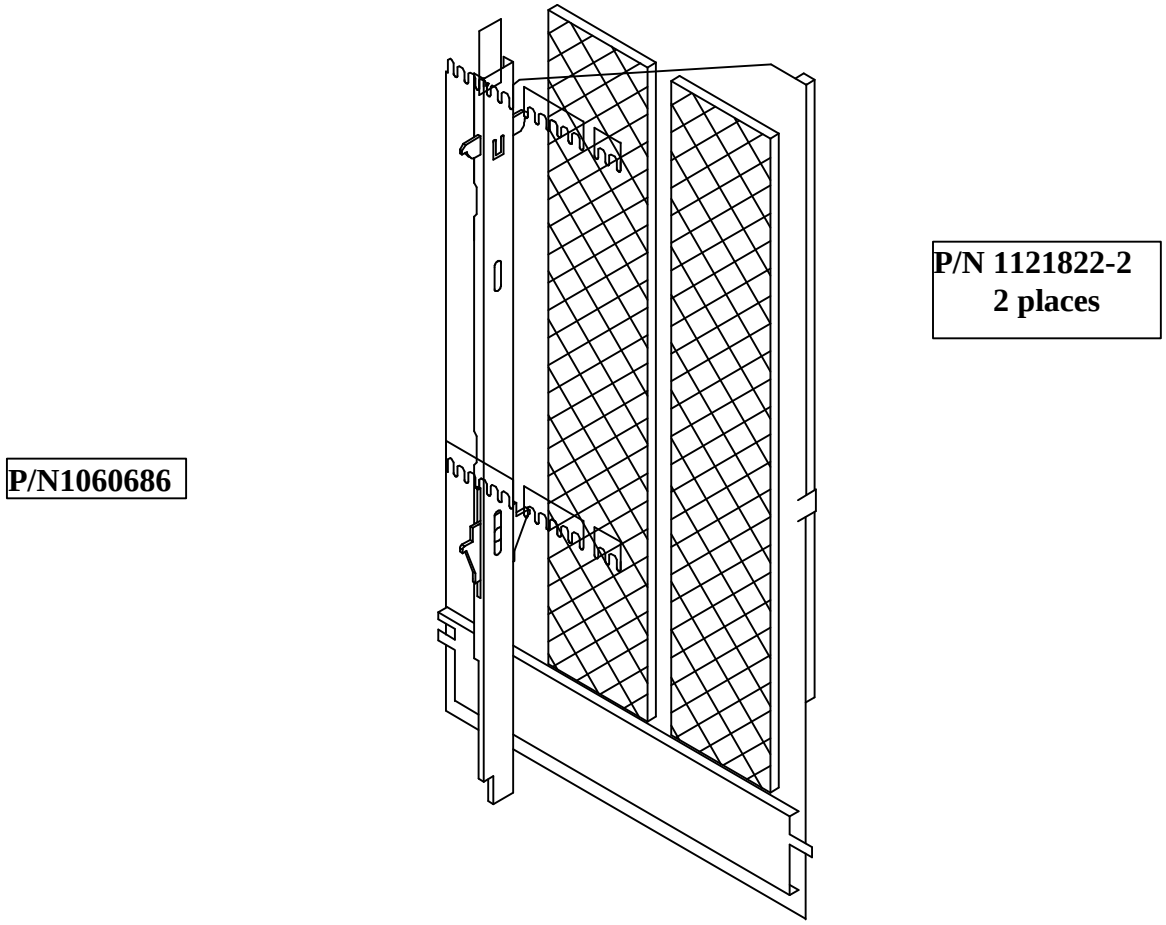

Figure 1
Right Side Partition