1. **PRODUCT**

   20 OZ. COKE SPRITE CONTOUR - 2.83 Top x 2.88 Btm x 8.95 Long

2. **PRODUCT CAPACITY**

   28 PER COLUMN - 72", 34 PER COLUMN - 79"

3. **SET UP GUIDE UNIVENDOR-2**

Product	CAM POSITION	BACK SPACER	GAGE BAR	Sold out Lever	SIDE SHIM	GAGE BAR CLIP	
						Part No.	Position
20 oz CokeSprite	2	13	1	389242 SHORT	NONE	1066112	1

Note: To properly vend 20oz. Sprite. The Univendor-2 must have the columns setup correctly.

4. **GAGE BAR CLIP SET UP.**

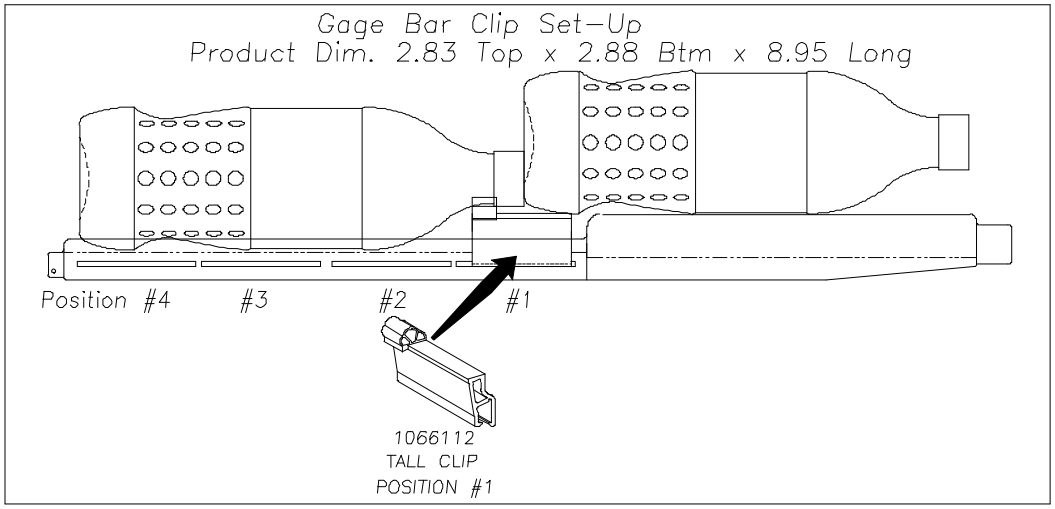

5. **SET UP GUIDE.**

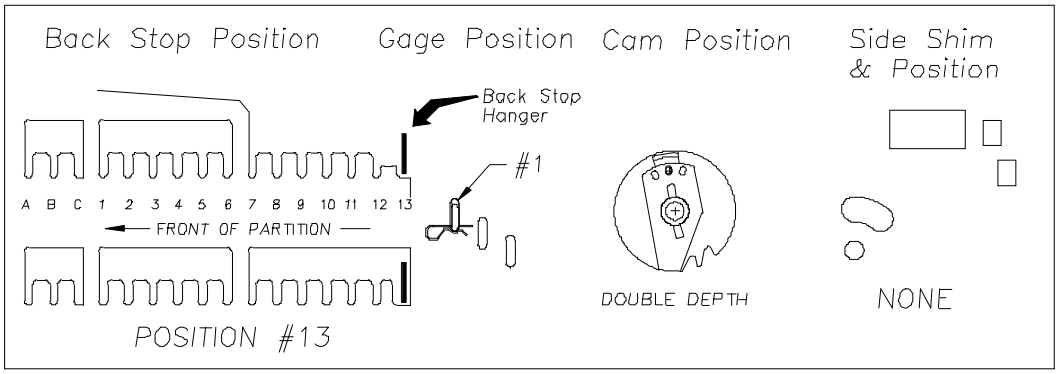

6. **SOLD-OUT LEVER TO BE SHORT STYLE WITH FRONT SPACER.**
   SPRING TO BE LOCATED ON THE RIGHT SIDE (LOW PRESSURE SETTING).