POWERADE (GENERAL) 20 OZ. P.E.T. BOTTLE

Vendo® Engineering

UNIVENDOR-2 POWERADE PRODUCT TYPE VARIATIONS ***5/22/96***

REV. 1/23/97

1. PRODUCT
20 OZ. POWERADE PET

2. PRODUCT CAPACITY
28 PER COLUMN - 72", 34 PER COLUMN - 79"

3. PRODUCT TYPES

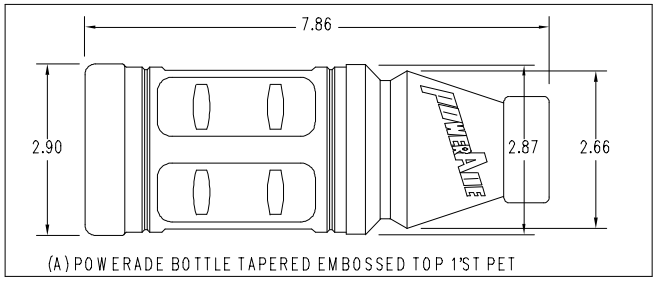

(A) POWERADE BOTTLE TAPERED EMBOSSED TOP 1'ST PET

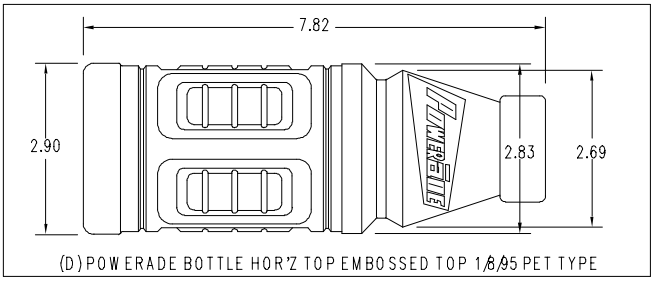

(D) POWERADE BOTTLE HOR'Z TOP EMBOSSED TOP 1/8/95 PET TYPE

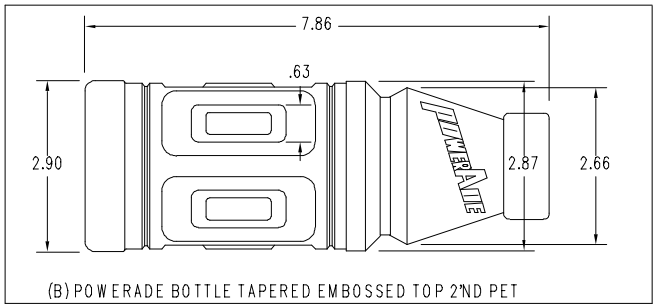

(B) POWERADE BOTTLE TAPERED EMBOSSED TOP 2'ND PET

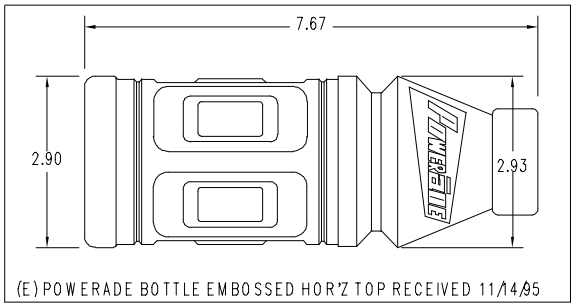

(E) POWERADE BOTTLE EMBOSSED HOR'Z TOP RECEIVED 11/14/95

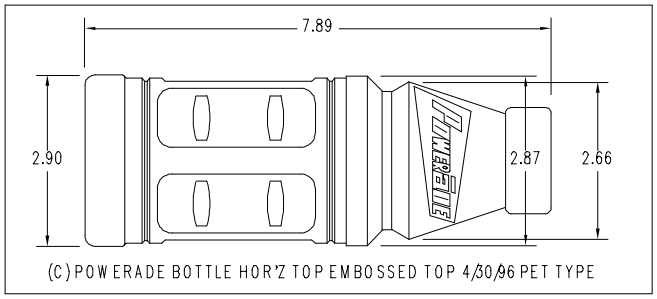

(C) POWERADE BOTTLE HOR'Z TOP EMBOSSED TOP 4/30/96 PET TYPE

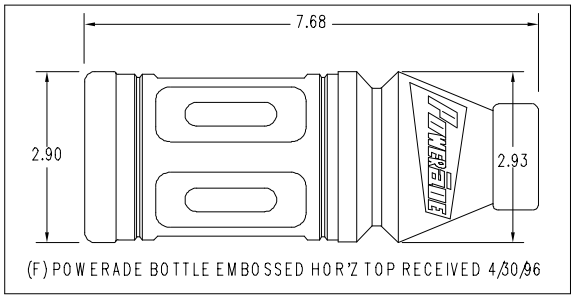

(F) POWERADE BOTTLE EMBOSSED HOR'Z TOP RECEIVED 4/30/96

4. SET UP GUIDE FOR A - D POWERADE PRODUCTS ON UNIVENDOR-2

CAM POSITION	BACK SPACER	GAGE BAR	Sold out Lever	SIDE SHIM	GAGE BAR CLIP Part No.	GAGE BAR CLIP Position
2	9	1	389242 SHORT	TWO 1066821	1066112-1 1066104	1 2

5. SET UP GUIDE FOR E - F POWERADE PRODUCTS ON UNIVENDOR-2

CAM POSITION	BACK SPACER	GAGE BAR	Sold out Lever	SIDE SHIM	GAGE BAR CLIP Part No.	GAGE BAR CLIP Position
2	10	1	389242 SHORT	NONE	1066112-1 1066104	1 2

6. FOR OTHER PRODUCT SET UP GUIDES CONTACT THE VENDO COMPANY.
TEL: (209) 439-1770 FAX: (209) 439-2083.