Vendo® Engineering *Uni-2 Set Up Guide*

Size: 15.2oz/450 ml **Rev. A** **Date 3/26/03**
Pkg. Description/Type: MINUTE MAID PET
Franchise: COKE

Column Setup

Cam Setting	Back Spacer	Neck Guide Locations	Gage Bar Clip Location	Gage Bar Location	Side Spacer	Sold Out Flap	Sold Out Spacer
2	9	N/A	C/#1	#1	1073589 Loc. #2	Short 1083449	1077457

Note: To properly vend product the Uni-2 must have the columns set up as illustrated. *Spring Loc. Rt (Low Tension) side.

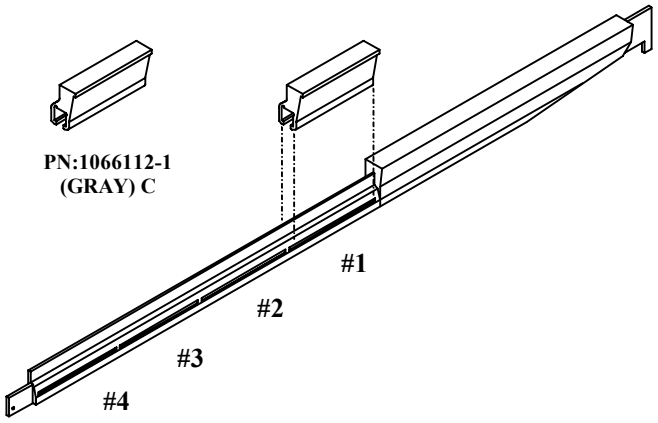

Gage Bar Clip Location

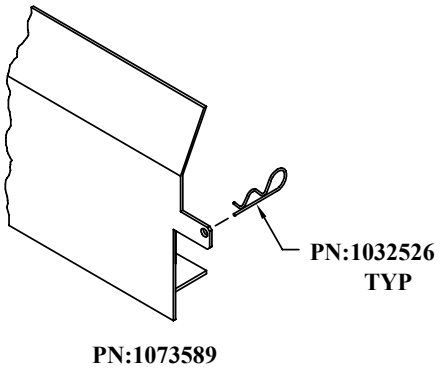

Shim/Spacer

Set Up Guide

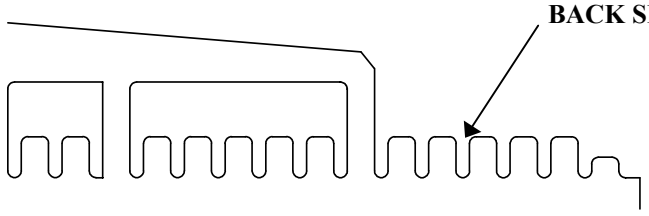

BACKSPACER / NECK GUIDE LOCATIONS

FRONT OF PARTITION

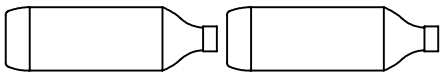

Note: Placement of bottle caps is to the back of the vendor

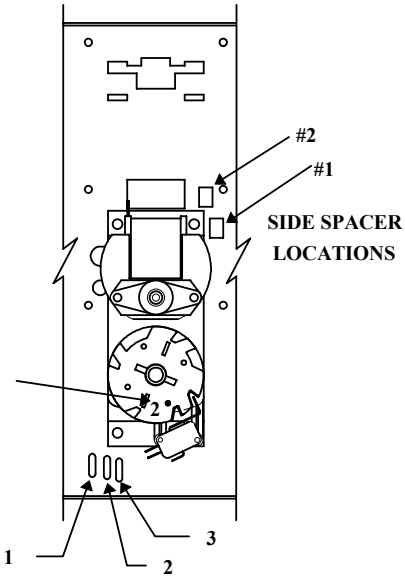

GAGE BAR LOCATIONS

FOR OTHER PRODUCT SET-UP GUIDES, CONTACT THE VENDO COMPANY.
TEL: (559) 439-1770 FAX: (559) 650-3455.