Vendo® Engineering *Uni-2 Set Up Guide*

Size: 500 ml **Rev. A** **Date 5/21/02**
Pkg. Description/Type: Dasani Water
Franchise: Coca-Cola

Column Setup

Cam Setting	Back Spacer	Neck Guide Locations	Gage Bar Clip Location	Gage Bar Location	Side Spacer	Sold Out Flap	Sold Out Spacer
1	A	N/A	A/#1	#2	1060686 Loc. #2	Short* 1083449	1077457

Note: To properly vend product, the Uni-2 must have the columns set up as illustrated. *Spring Loc. Rt (Low Tension) side.

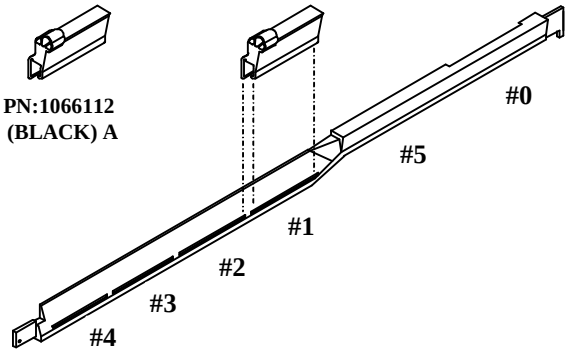

Shim/Spacer

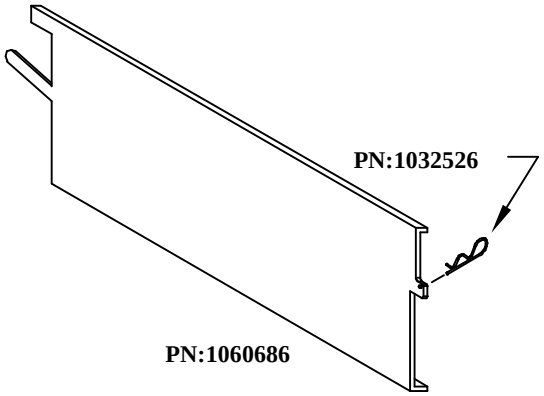

Gage Bar Clip Location

Set Up Guide

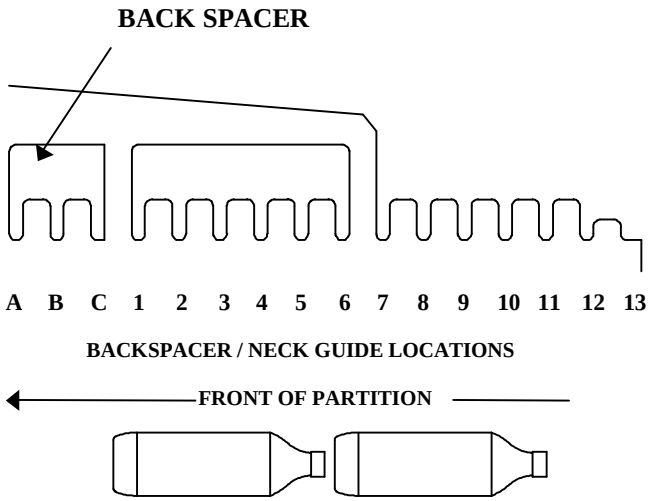

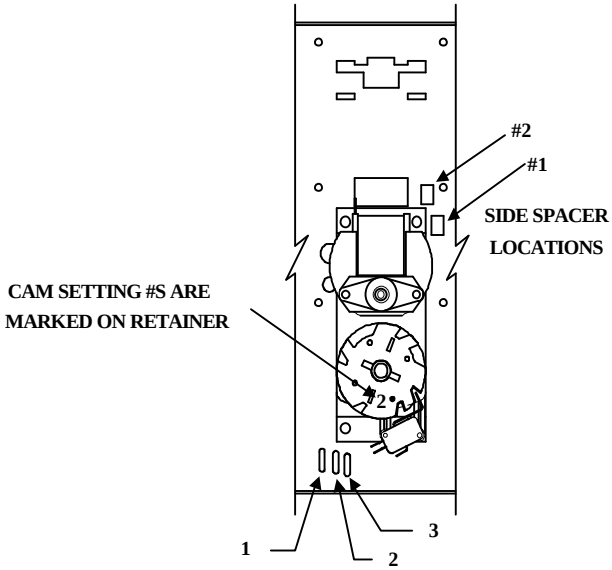

Note: Placement of bottle caps is to the back of the vendor

FOR OTHER PRODUCT SET-UP GUIDES, CONTACT THE VENDO COMPANY
TEL: (559) 439-1770 FAX: (559) 650-3455