1. **PRODUCT**

   20 OZ. POWERADE SLICK NECK WITH STD CAP - 2.90 Top x 2.90 Btm x 7.67 Long

2. **PRODUCT CAPACITY**

   28 PER COLUMN - 72", 34 PER COLUMN - 79"

3. **SET UP GUIDE UNIVENDOR-2**

Product	CAM POSITION	BACK SPACER	GAGE BAR	Sold out Lever	SIDE SHIM	GAGE BAR CLIP Part No.	GAGE BAR CLIP Position
20 oz Powerade	2	9	1	389242 SHORT	*TWO 1074465	1066112-1 1066104	1 2

Note: To properly vend 20oz Powerade. The Univendor-2 must have the columns setup correctly.

4. **GAGE BAR CLIP SET UP.**

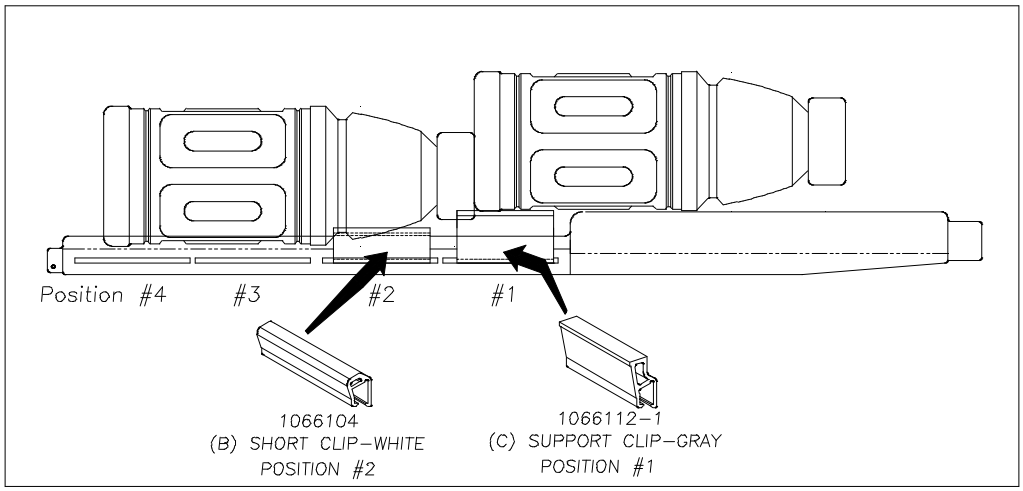

5. **SET UP GUIDE.**

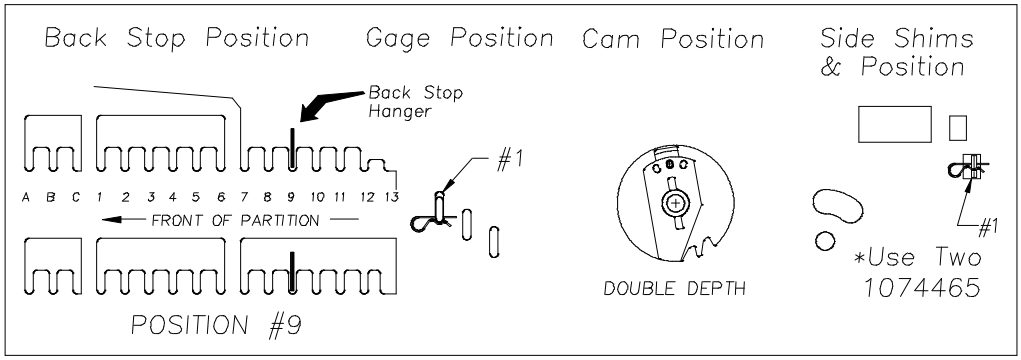

Note: *Due to the variance of diameter of the product from the PET Mfg. two flat shims will be required to properly vend 20oz. Powerade. If product exceeds the dimension of 2.905 +.080 remove shims accordingly.

6. **SOLD-OUT LEVER TO BE SHORT STYLE WITH FRONT SPACER.**
   SPRING TO BE LOCATED ON THE RIGHT SIDE (LOW PRESSURE SETTING).

7. **FOR OTHER PRODUCT SET UP GUIDES CONTACT THE VENDO COMPANY.**
   TEL: (209) 439-1770 FAX: (209) 439-2083.