Vendo® Engineering *Uni-2 Set Up Guide*

Size: 17.6oz/520ml **Rev. A Date 3/31/03**
Pkg. Description/Type: Mad River
Franchise: Coca-Cola

Column Setup

Cam Setting	Back Spacer	Neck Guide Locations	Gage Bar Clip Location	Gage Bar Location	Side Spacer	Sold Out Flap	Sold Out Spacer
2	10	N/A	C/#1, E/#5	#1	3 -1074465 Loc. #1	Short* 1083449	1077457

Note: To properly vend product, the Uni-2 must have the columns set up as illustrated. *Spring Loc. Rt (Low Tension) side.

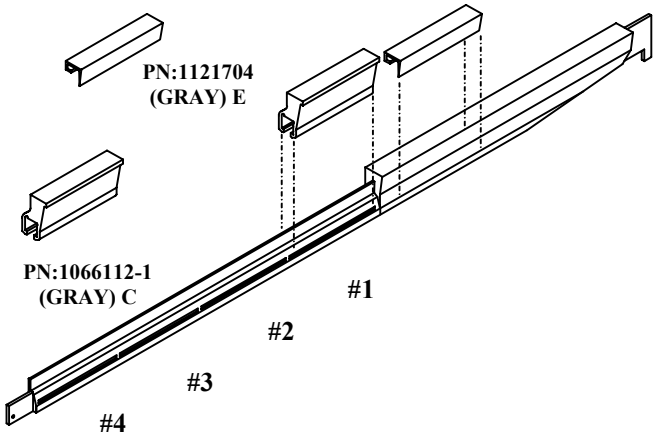

Gage Bar Clip Location

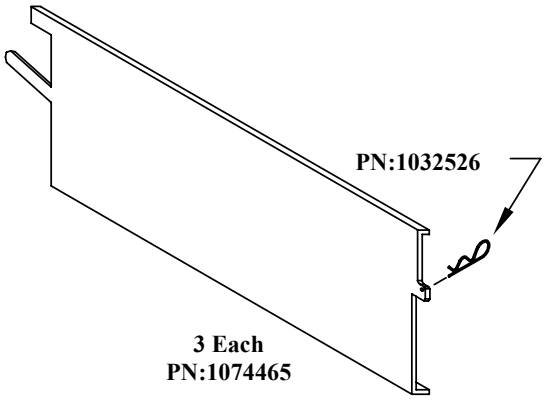

Shim/Spacer

Set Up Guide

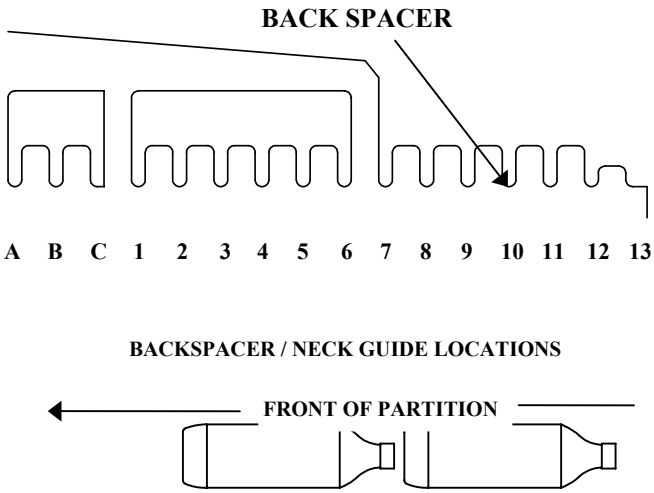

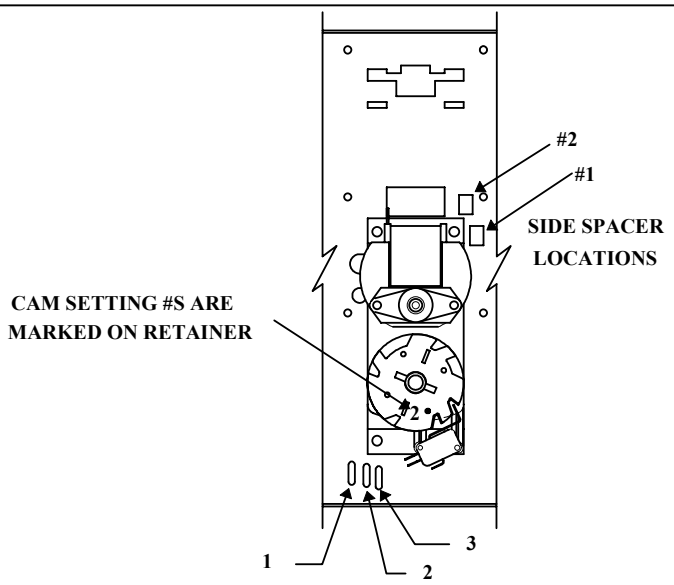

Note: Placement of bottle caps is to the back of the vendor

FOR OTHER PRODUCT SET-UP GUIDES, CONTACT THE VENDO COMPANY
TEL: (559) 439-1770 FAX: (559) 439-2083.