POWERADE (ATLANTA) HORIZONTAL LOGO TOP 20 OZ P.E.T. BOTTLE

Vendo® Engineering ***UNIVENDOR-2 PRODUCT SET-UP GUIDE***

11/25/96

REV. 1/23/97

1. PRODUCT

2.905 ±.080 x 7.693 ±.060 Long

2. PRODUCT CAPACITY
28 PER COLUMN - 72", 34 PER COLUMN - 79"

3. SET UP GUIDE

CAM POSITION	BACK SPACER	GAGE BAR	Sold out Lever	SIDE SHIM	GAGE BAR CLIP	
					Part No.	Position
2	10	1	389242 SHORT	*TWO 1066821	1066112-1 1066104	1 2

4. GAGE BAR CLIP SET UP.

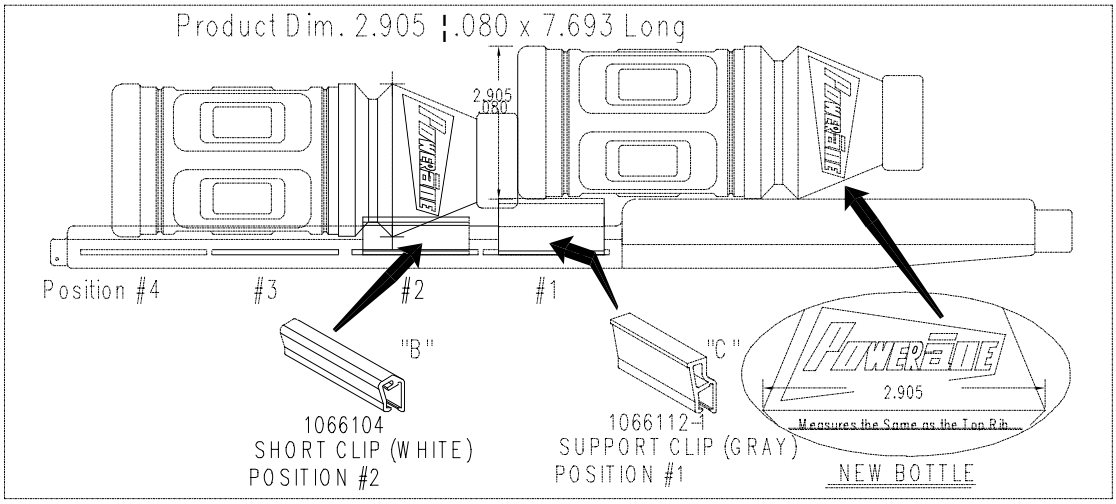

5. SET UP GUIDE.

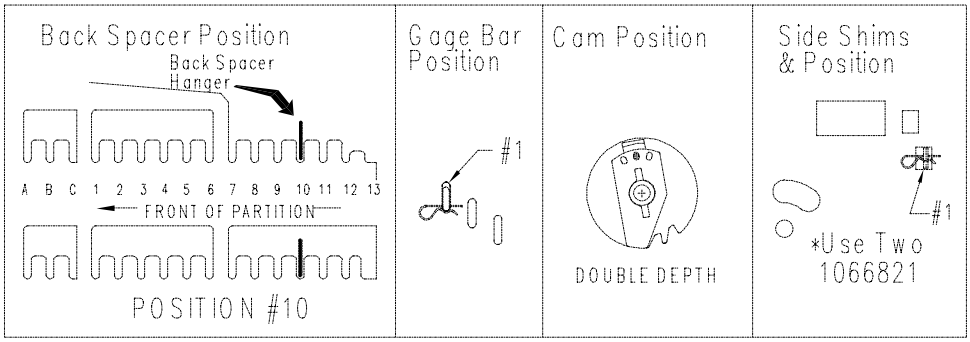

Note: *Due to the variance of diameter of the product from the PET Mfg. two flat shims will be required to properly vend 20oz. Powerade. If product exceeds the dimension of 2.905 +.080 remove shims accordingly.

6. SOLD-OUT LEVER TO BE SHORT STYLE WITH FRONT SPACER.
SPRING TO BE LOCATED ON THE RIGHT SIDE (LOW PRESSURE SETTING).

7. FOR OTHER PRODUCT SET UP GUIDES CONTACT THE VENDO COMPANY.

POWERADE (ATLANTA) HORIZONTAL LOGO TOP 20 OZ P.E.T. BOTTLE

TEL: (209) 439-1770 FAX: (209) 439-2083.