1. **PRODUCT**

   16 OZ. MINUTE MAID PET - 2.84 - 2.92 ƒ x 6.78L Long

2. **PRODUCT CAPACITY**

   28 PER COLUMN - 72", 34 PER COLUMN - 79"

3. **SET UP GUIDE UNIVENDOR-2**

Product	CAM POSITION	BACK SPACER	GAGE BAR	Sold out Lever	Spacer	SIDE SHIM	GAGE BAR CLIP	
							Part No.	Position
16 oz M. Maid	2	6	1	1083449	1077457	NA	1066112-1 1066104	1 2

Note: To properly vend 16oz. Minute Maid. The Univendor-2 must have the columns setup correctly.

4. **GAGE BAR CLIP SET UP.**

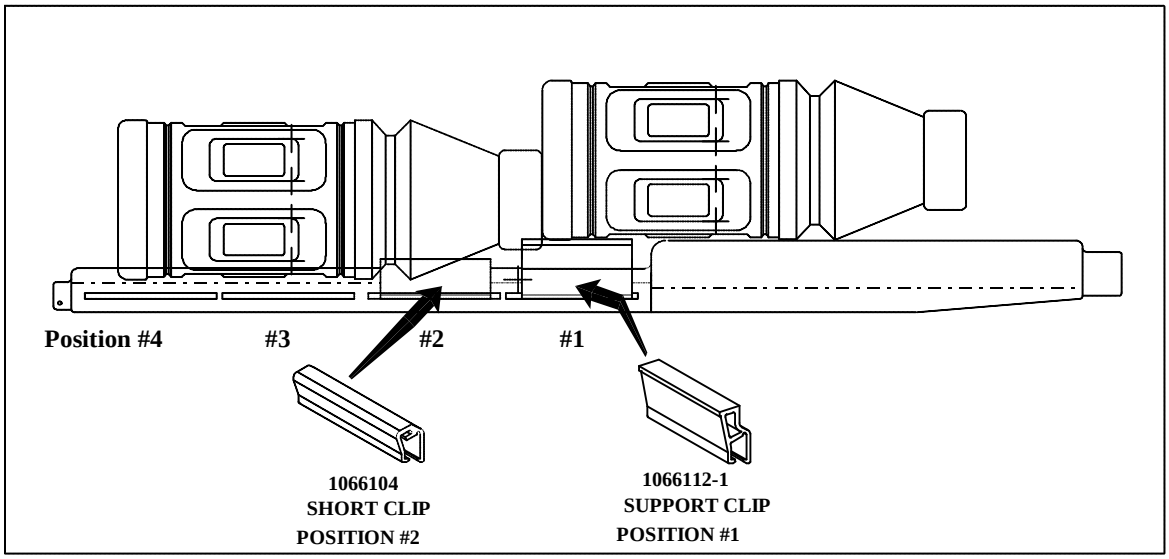

5. **SET UP GUIDE.**

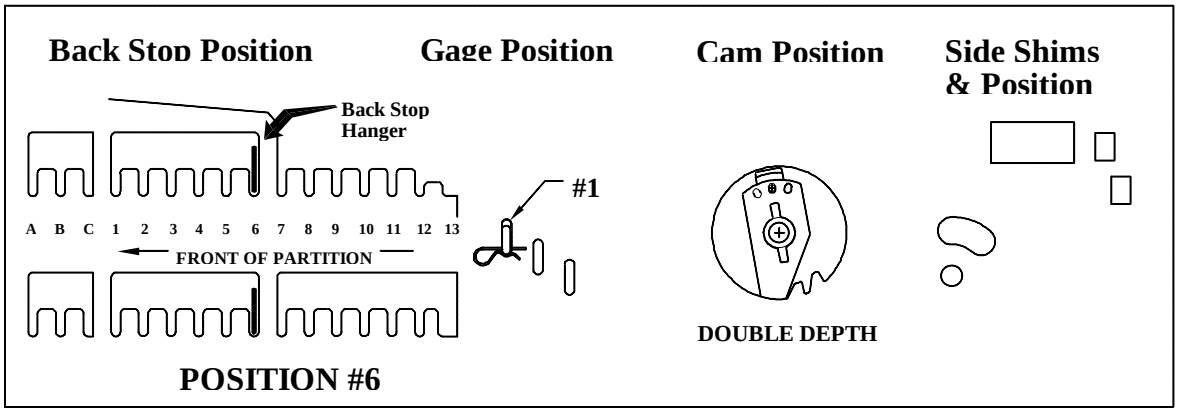

6. **SOLD-OUT LEVER TO BE SHORT STYLE WITH FRONT SPACER.**
   SPRING TO BE LOCATED ON THE RIGHT SIDE (LOW PRESSURE SETTING).

7. **FOR OTHER PRODUCT SET UP GUIDES CONTACT THE VENDO COMPANY.**
   TEL: (559) 439-1770 FAX: (559) 439-2083.